SECTION (1:25)

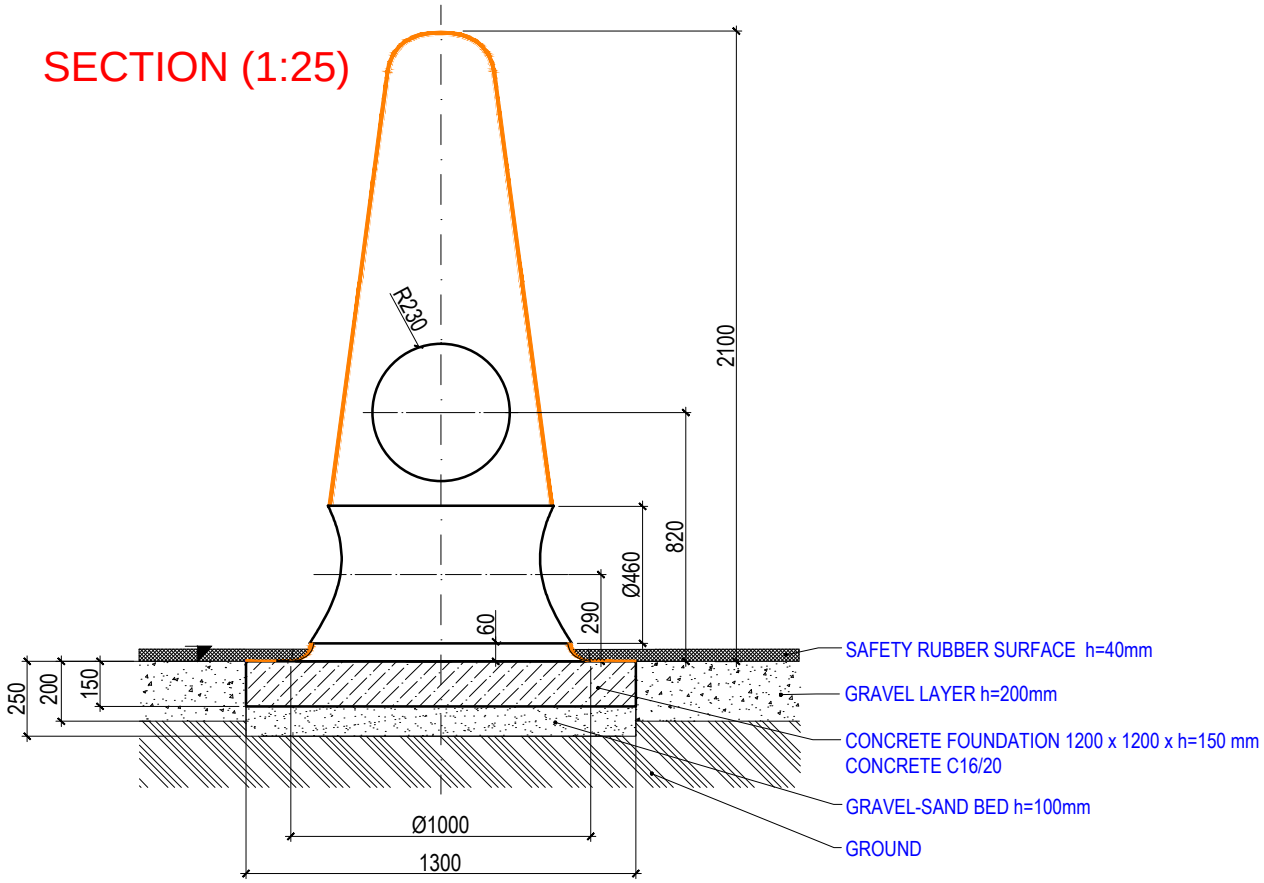

GROUND PLAN (1:25)

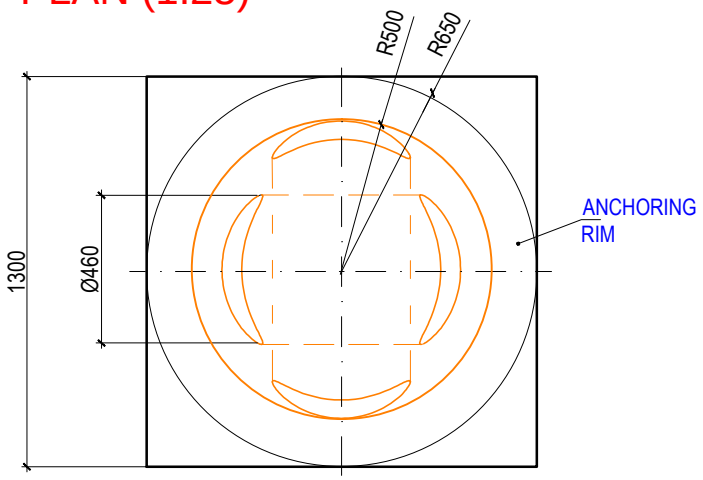

concrete foundation h=150mm
concrete C16/20

ANCHORING DETAIL (1:10)

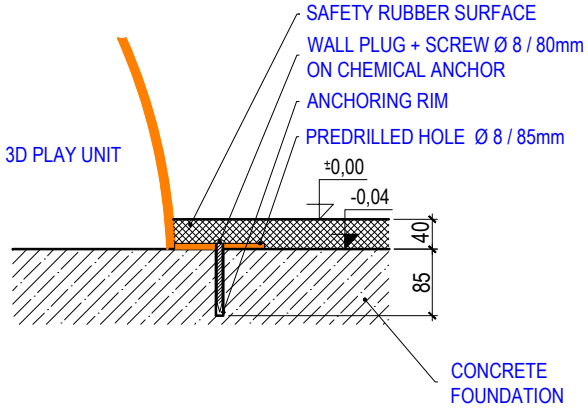

Author:		3D PROGRAM, s.r.o. Objízdná 1911 765 02 Otrokovice, Czech Republic Tel: +420 602 500 045 Email: info@3dprogram.eu	3D PROGRAM ®
MgA. Maxmilián Blšták			
TECHNICAL DRAWING		Certified according to	EN71 , EN1176
		Date of issue	22.2.2021
E01p, E01s, E02p, E02s, E03 - LIGHTHOUSE		M 1:25, 1:10	format 1xA4
Foundation and anchoring - ground plan and section		E01-03_EN.dwg	revision 0